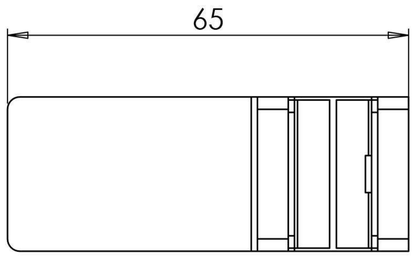

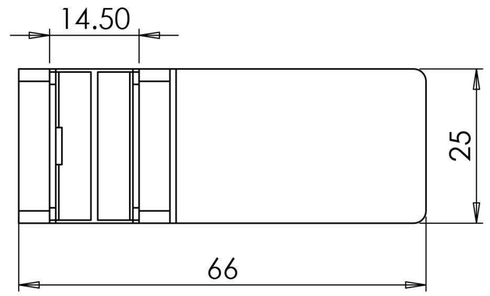

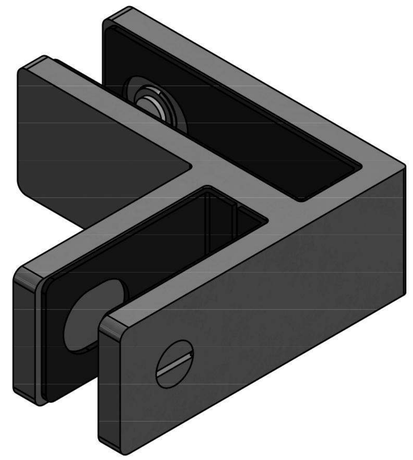

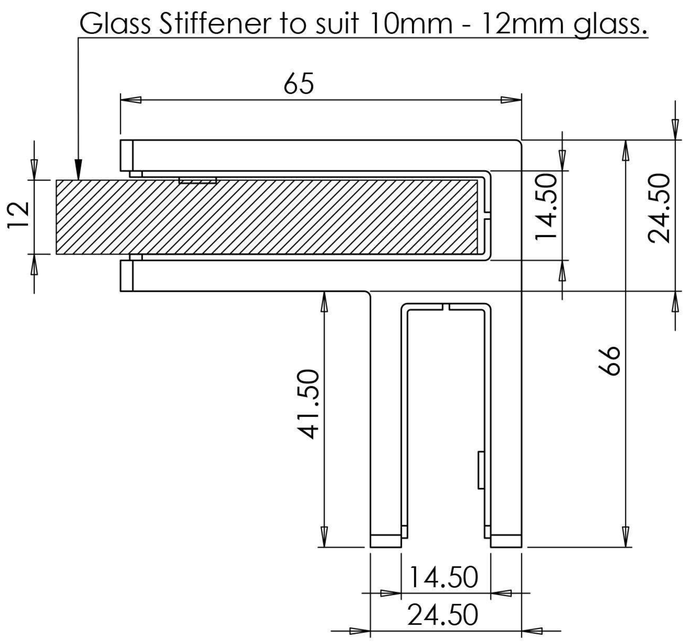

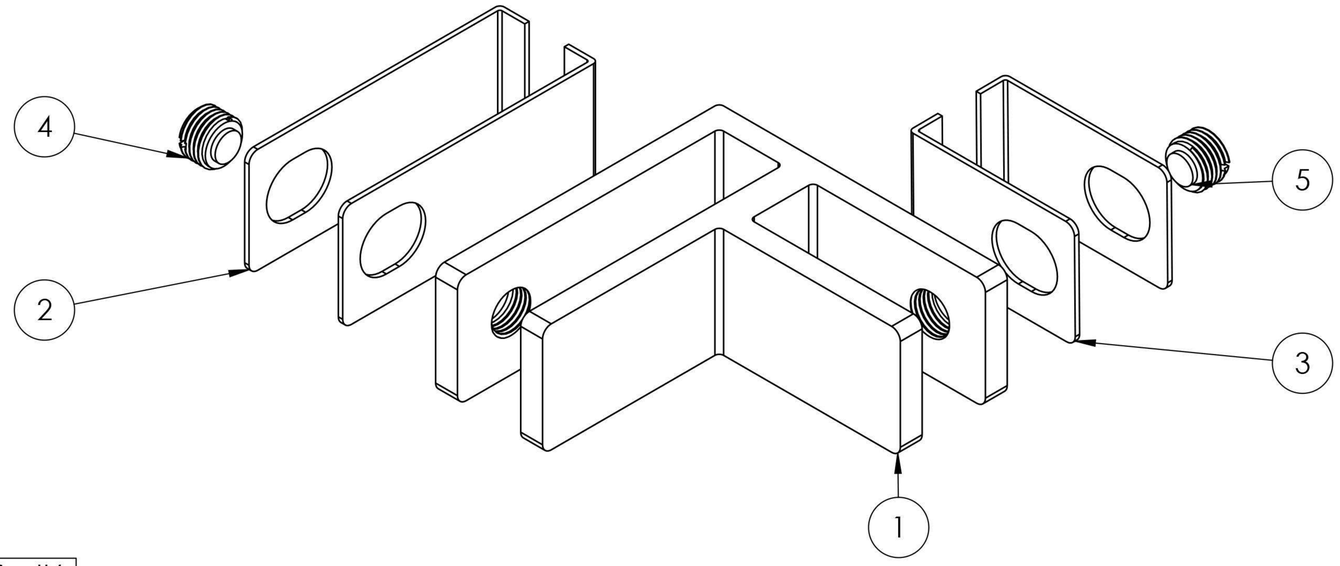

ITEM NO.	PART NUMBER	DESCRIPTION	Default/ QTY.
1	182242112	90 degree bracket for 10mm - 12mm glass	1
2	182242112 Part4	Black Plastic Gasket	2
3	182242112 Part3	Black Plastic Gasket	2
4	182242112 Part2	Flat Head Screw	2
5	182242112 Part5	Rubber	2