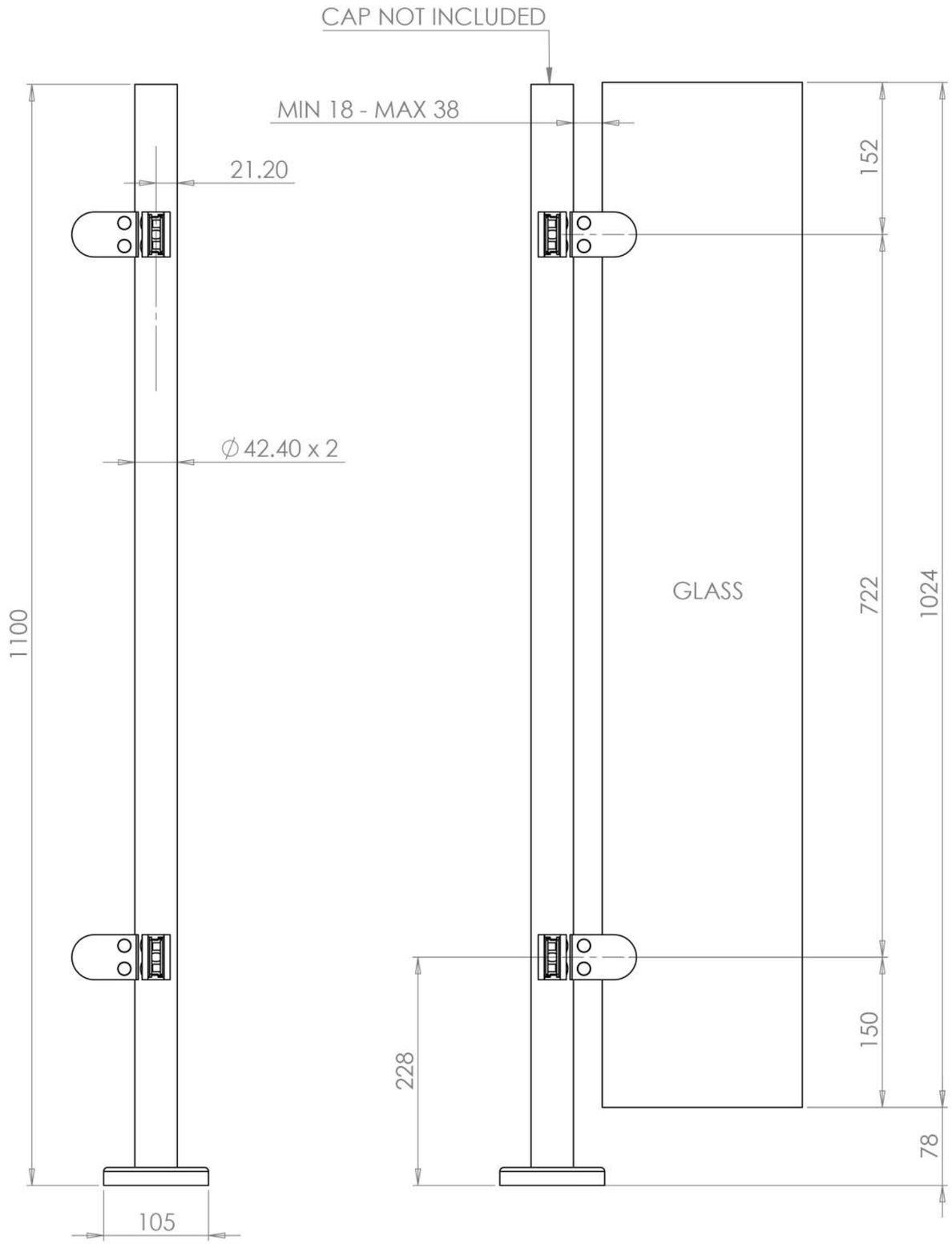

Base Plate Detail

Scale 1:2

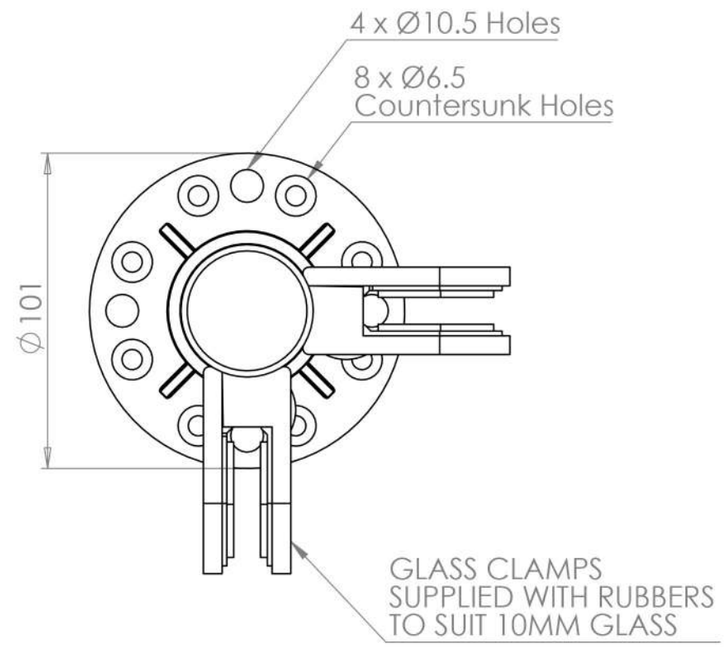

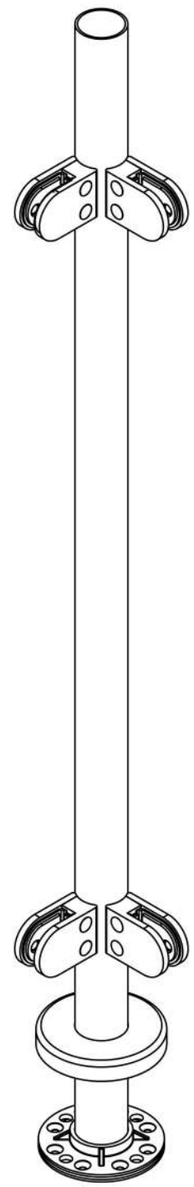

Part Code	Material	Finish	Grit Size
1804763C	304 Stainless	Satin Polished	320
1806763C	316 Stainless	Satin Polished	320
1806763CM	316 Stainless	Mirror Finish	800

DESCRIPTION: 42.4mm Corner Post Welded Base & Cover 4 x Clamps, Without Top, 1100mm High

	NAME	DATE	REVISION	UNLESS OTHERWISE SPECIFIED ALL DIMENSIONS ARE IN MILLIMETERS		A3
DRAWN	EF	27/06/19	F			
CHECKED				DO NOT SCALE DRAWING	SCALE:1:5	