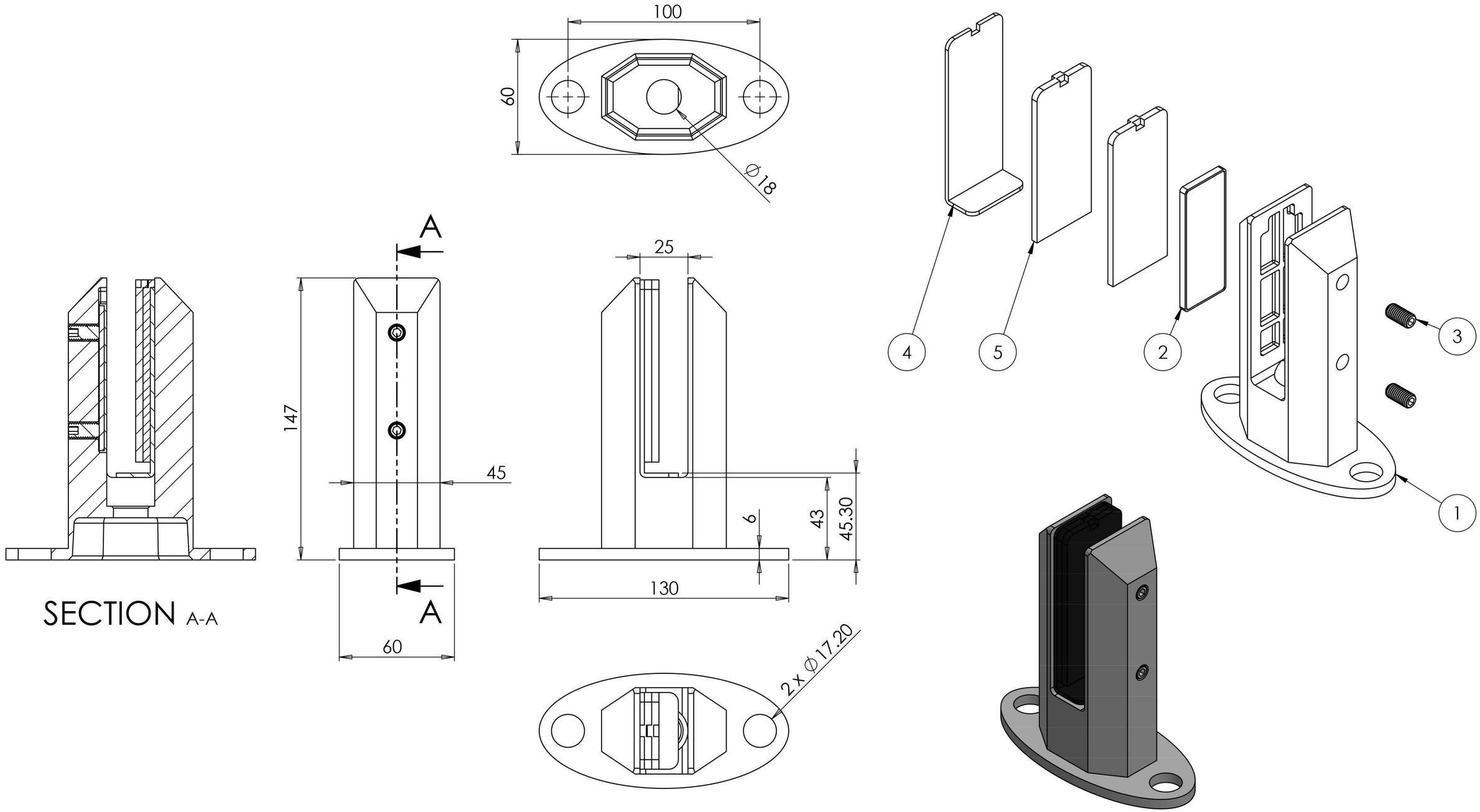

ITEM NO.	DESCRIPTION	QTY.
1	Glass Spigot Base Fix 10 - 21.52mm Glass Sqaure Model Duplex 2205	1
2	Insert - Steel & Plastic	1
3	M10 Hex Head	2
4	Insert - L Shaped Plastic	1
5	Insert - Plastic Spacer	2