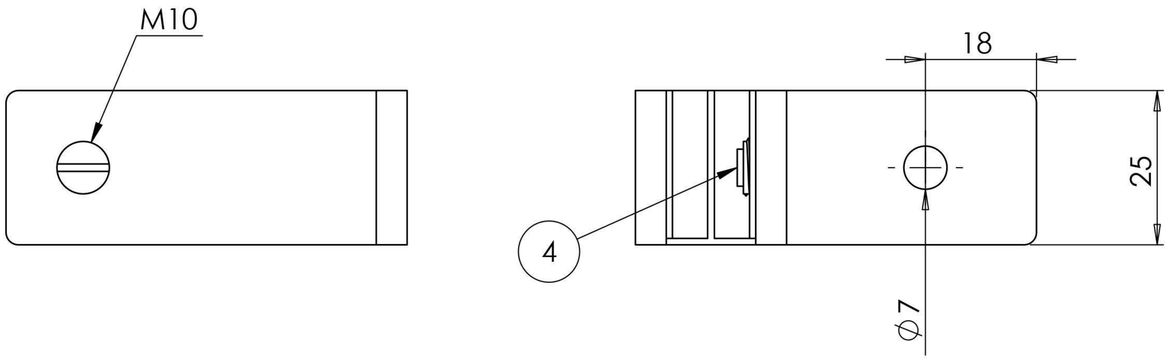

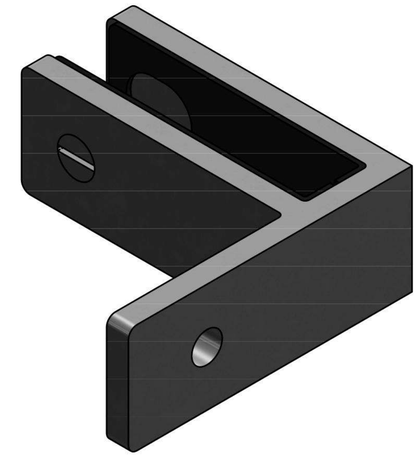

Glass Stiffener to suit 10mm - 12mm Glass

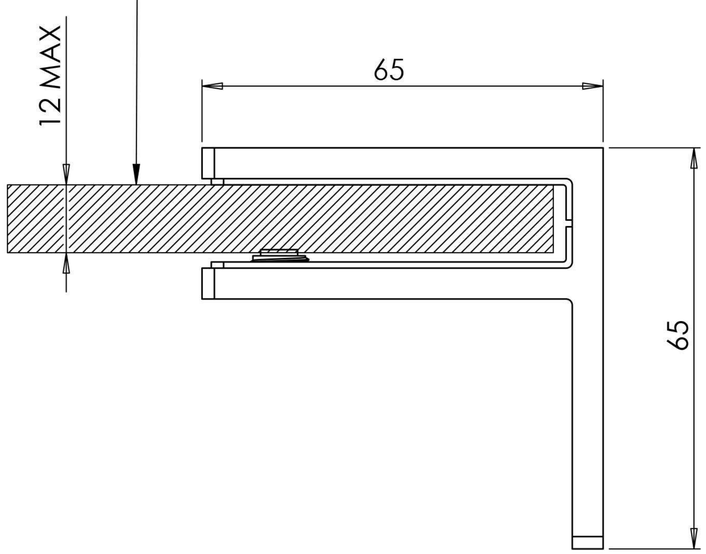

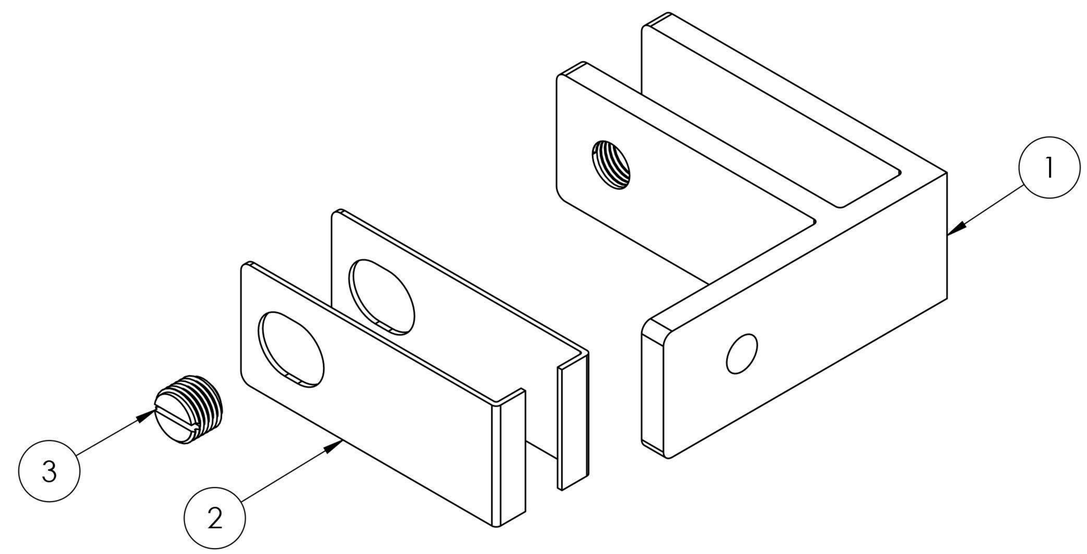

ITEM NO.	PART NUMBER	DESCRIPTION	QTY.
1	182242012	Wall Bracket to suit 10mm - 12mm glass	1
2	182242012 Part1	Black Plastic Gasket	2
3	182242012 Part2	Flat Head Screw	1
4	182242012 Part3	Rubber	1

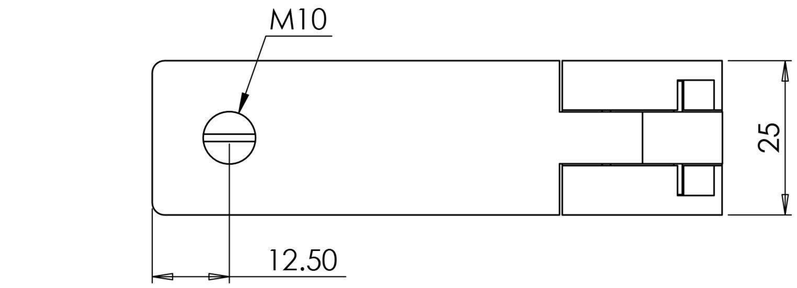

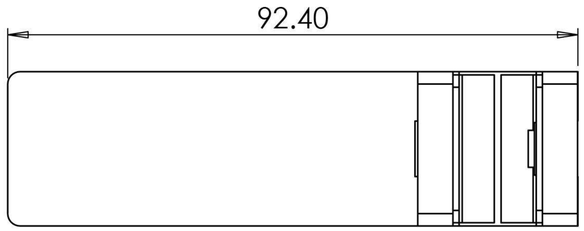

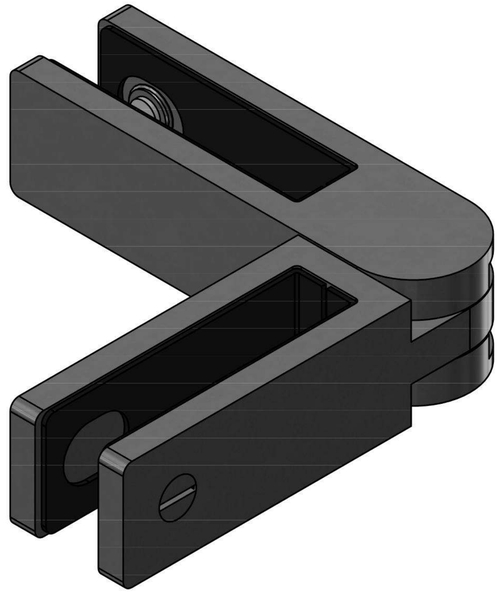

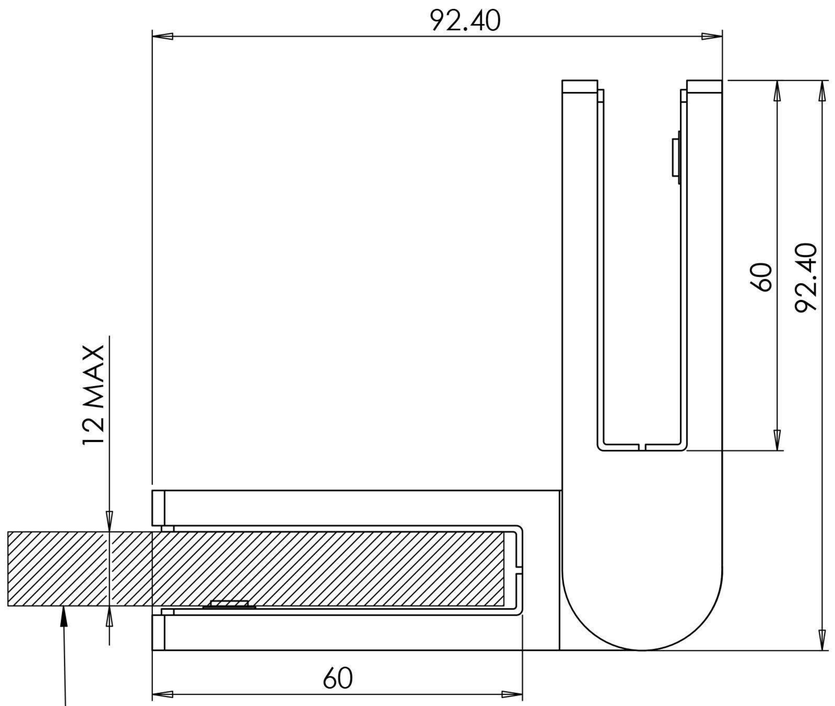

Glass Stiffener to suit 10mm - 12mm Glass

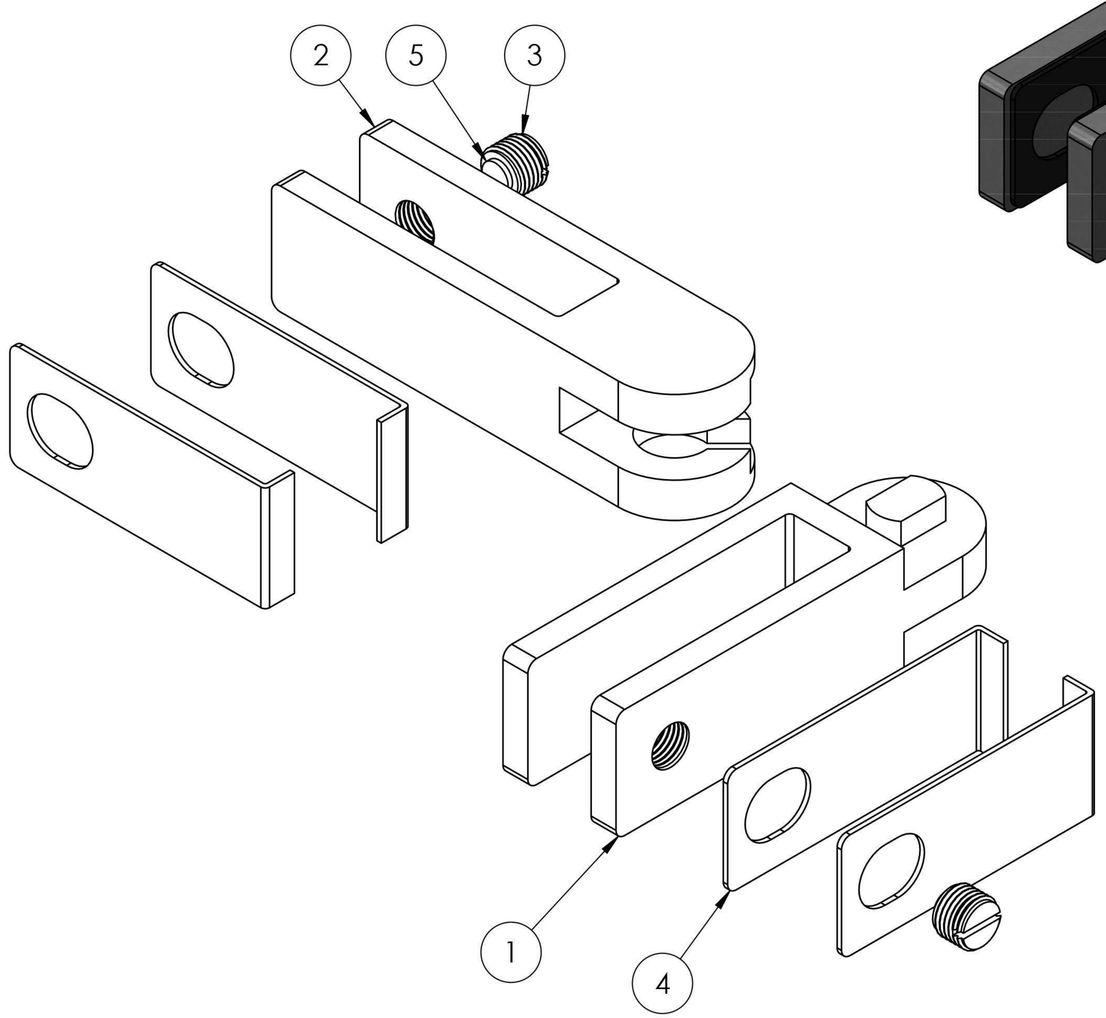

ITEM NO.	PART NUMBER	DESCRIPTION	Fixed /QTY.
1	182242312 Part2	Male side of adjustable bracket 90 - 180 degree	1
2	182242312 Part1	Female side of adjustable bracket 90 - 180 degree	1
3	182242312 Part3	Flat Head Screw	2
4	182242312 Part4	Black Plastic Gasket	4
5	182242312 Part5	Rubber	2

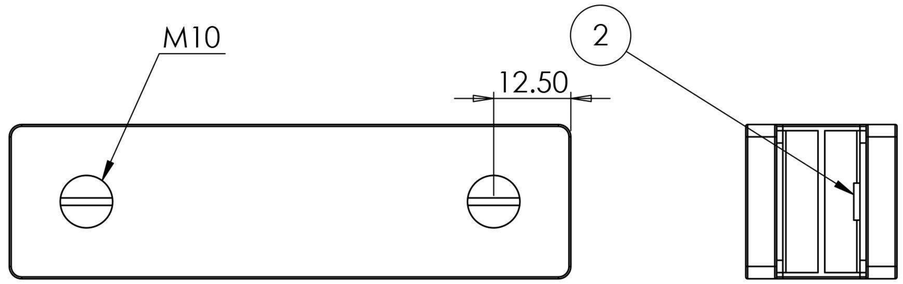

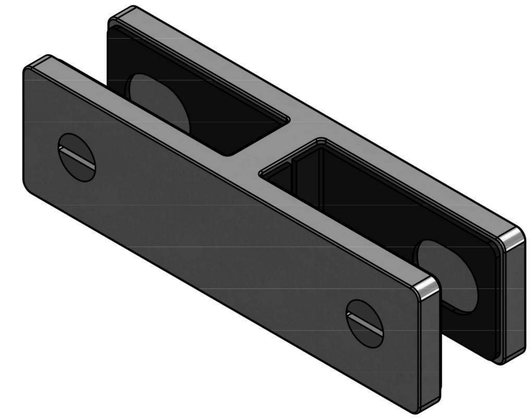

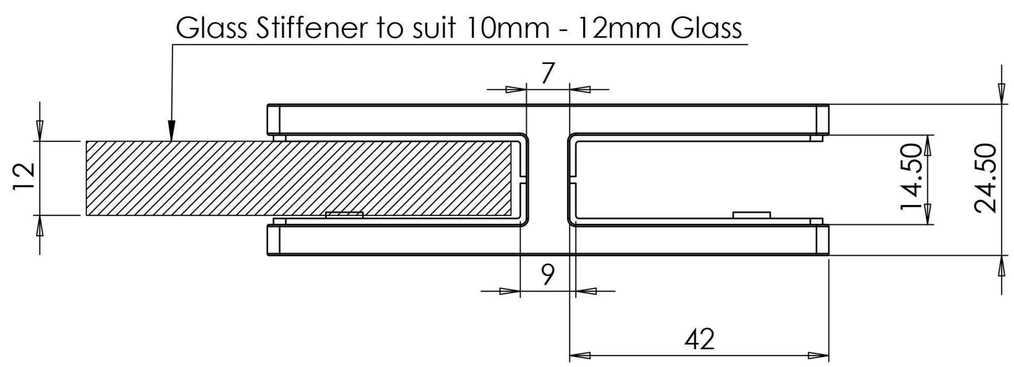

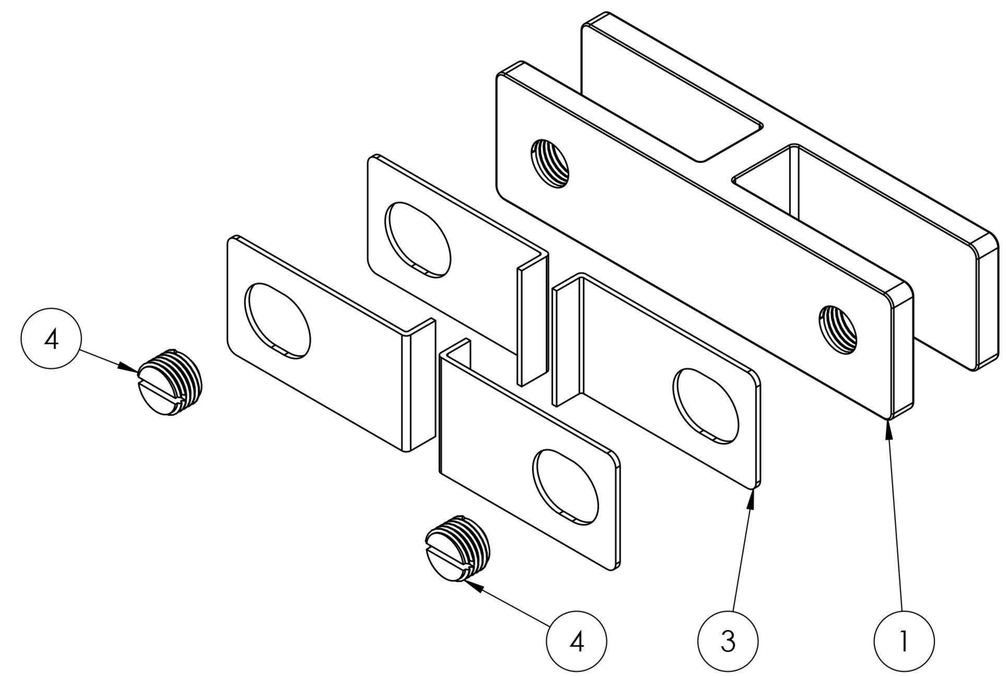

ITEM NO.	PART NUMBER	DESCRIPTION	QTY.
1	182242212	180 Degree Bracket 10mm - 12mm glass	1
2	182242212 Part3	Rubber	2
3	182242212 Part2	Black Plastic Gasket	4
4	182242212 Part1	Flat Head Screw	2

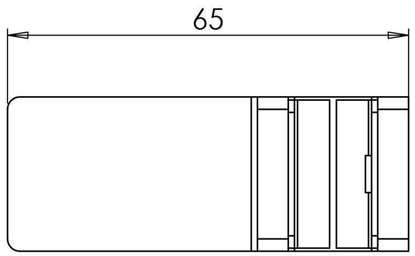

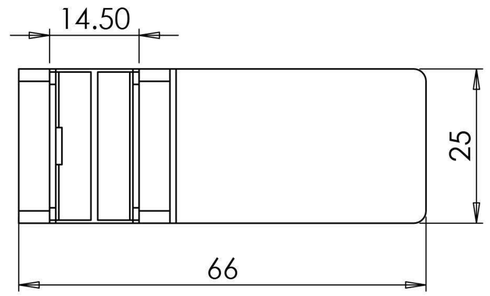

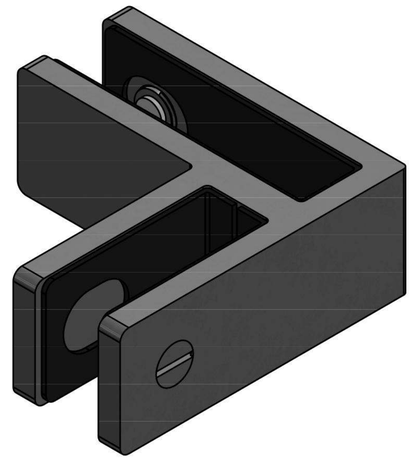

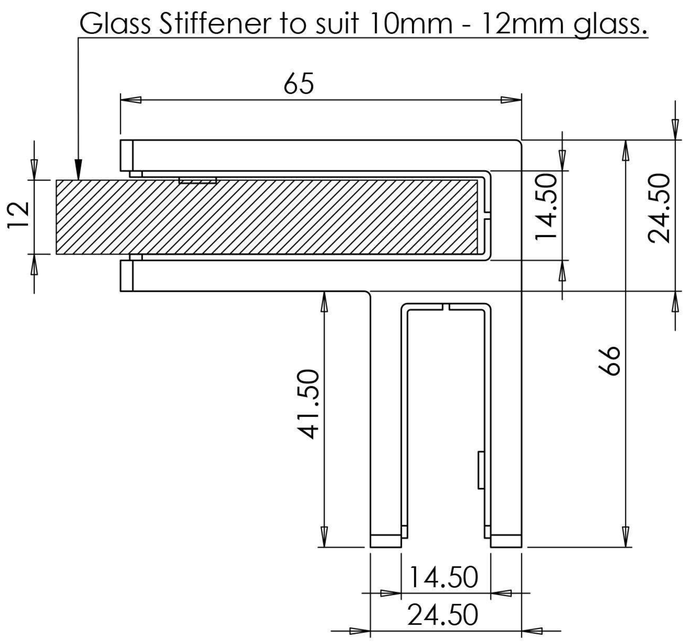

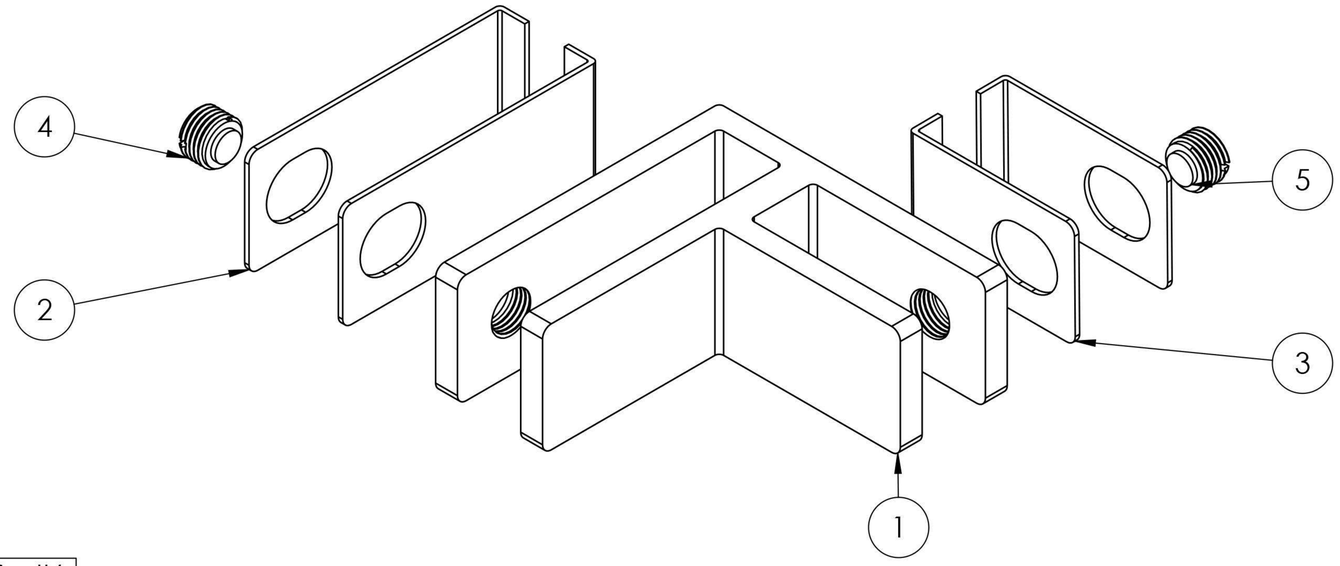

ITEM NO.	PART NUMBER	DESCRIPTION	Default/ QTY.
1	182242112	90 degree bracket for 10mm - 12mm glass	1
2	182242112 Part4	Black Plastic Gasket	2
3	182242112 Part3	Black Plastic Gasket	2
4	182242112 Part2	Flat Head Screw	2
5	182242112 Part5	Rubber	2