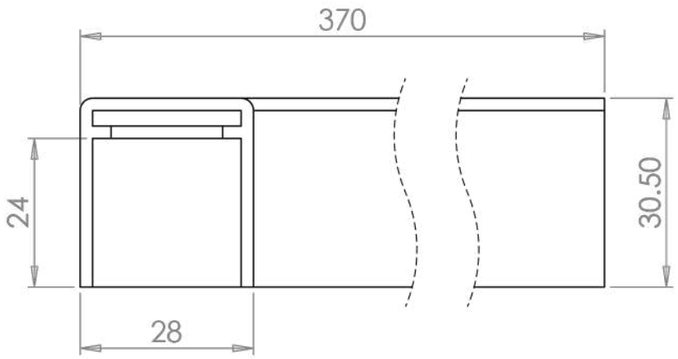

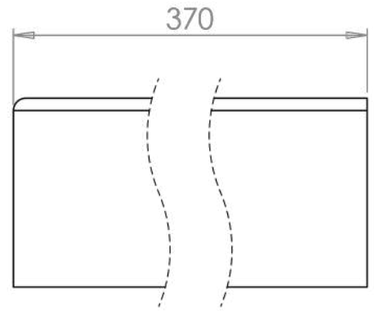

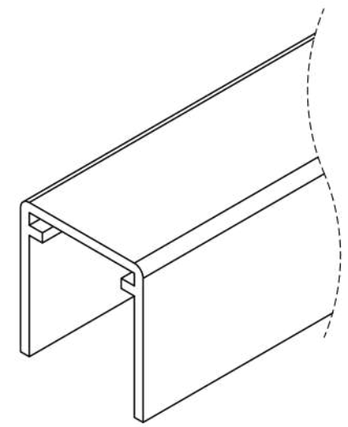

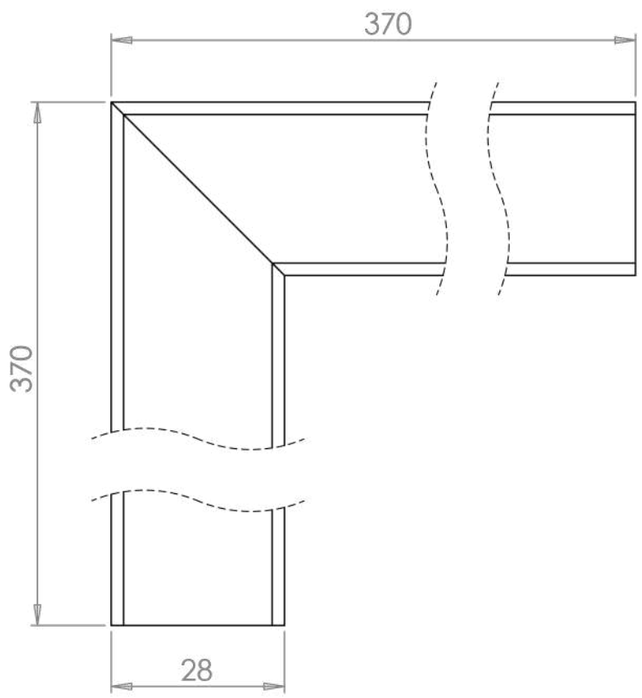

DESCRIPTION: 90 Degree Aluminium Top Rail 28 x 30mm					
	NAME	DATE	REVISION	*UNLESS OTHERWISE SPECIFIED ALL DIMENSIONS ARE IN MILLIMETERS*	
DRAWN	TS	16/11/2021	A		
CHECKED				DO NOT SCALE DRAWING	SCALE:1:1

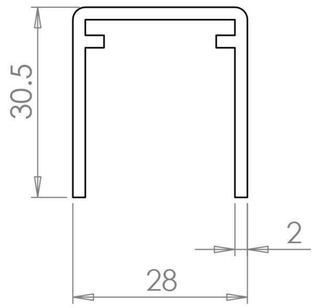

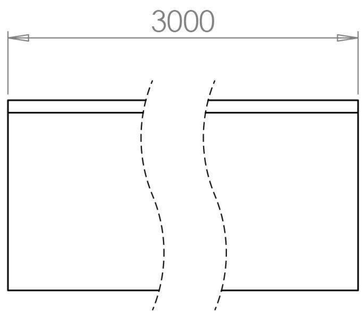

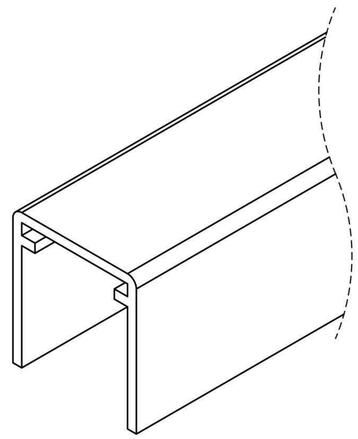

DESCRIPTION: Aluminium Top Rail 28 x 30mm 3M Long					
	NAME	DATE	REVISION	*UNLESS OTHERWISE SPECIFIED ALL DIMENSIONS ARE IN MILLIMETERS*	
DRAWN	TS	16/11/2021	A		
CHECKED				DO NOT SCALE DRAWING	SCALE:1:1

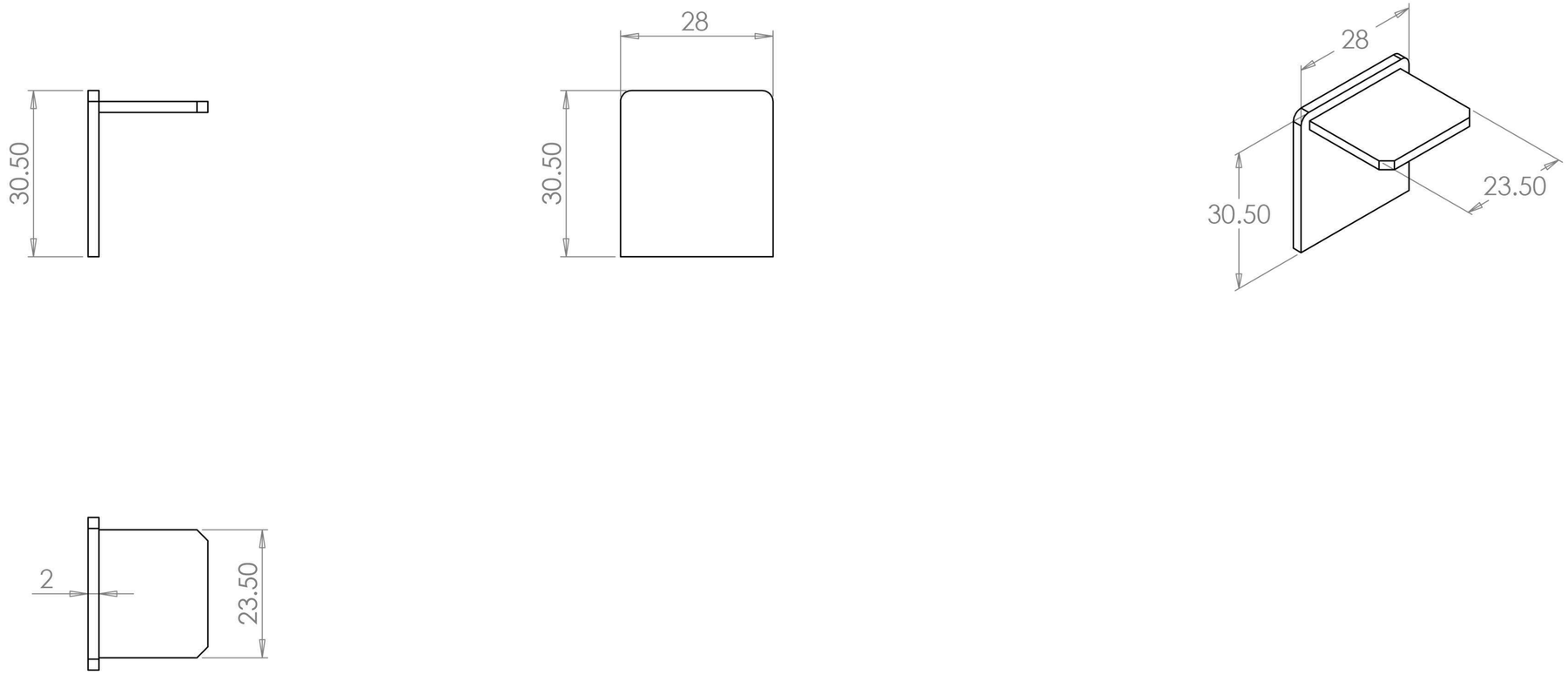

DESCRIPTION: End Cap Anodised Silver					
	NAME	DATE	REVISION	*UNLESS OTHERWISE SPECIFIED ALL DIMENSIONS ARE IN MILLIMETERS*	
DRAWN	GC	18/04/2018	E		
CHECKED				DO NOT SCALE DRAWING	SCALE:1:1