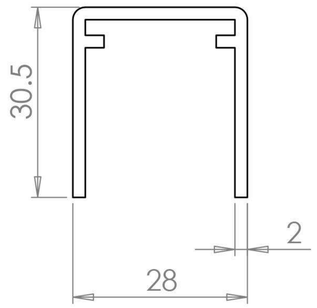

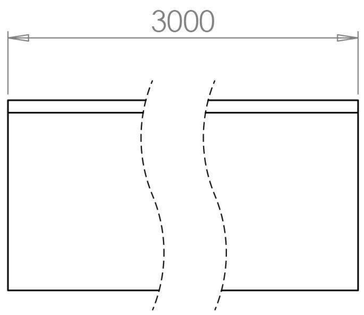

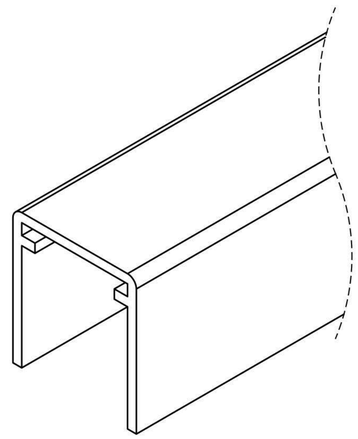

DESCRIPTION: Aluminium Top Rail 28 x 30mm 3M Long					
	NAME	DATE	REVISION	*UNLESS OTHERWISE SPECIFIED ALL DIMENSIONS ARE IN MILLIMETERS*	
DRAWN	TS	16/11/2021	A		
CHECKED				DO NOT SCALE DRAWING	SCALE:1:1