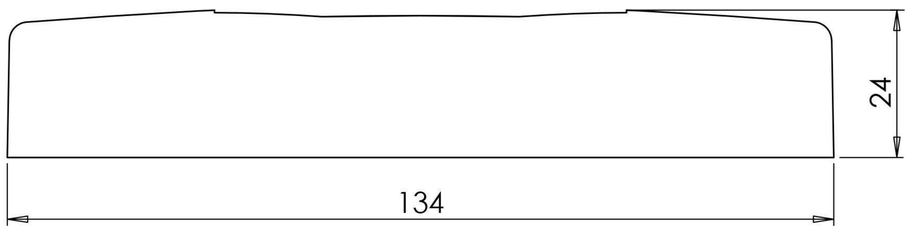

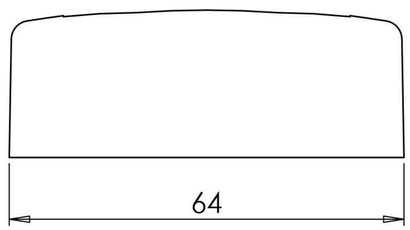

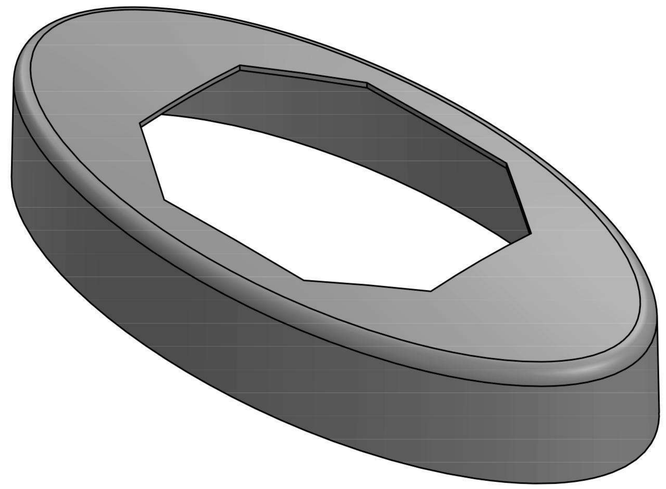
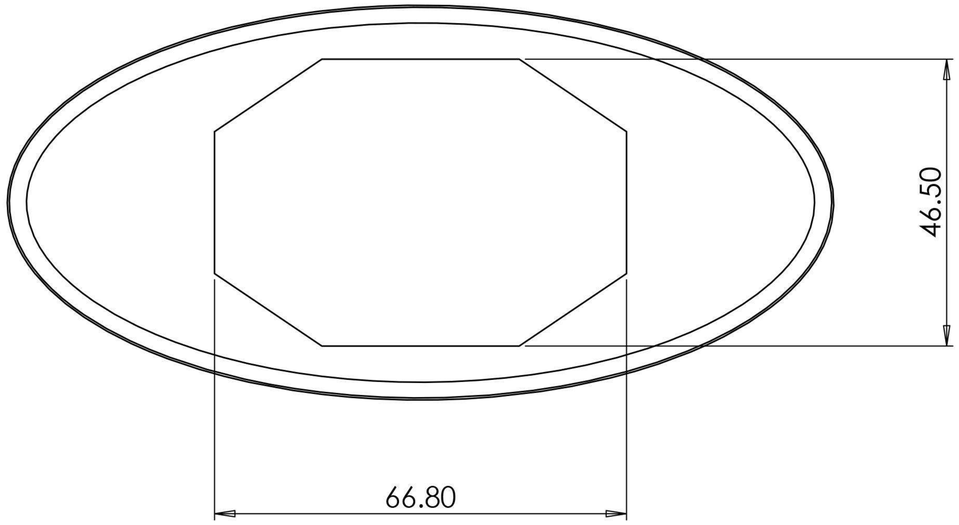
Cover Plate For Use With 1822008