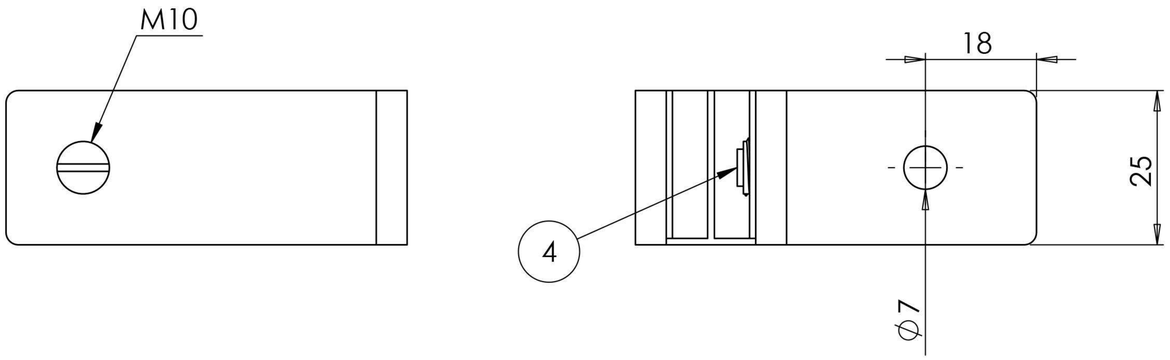

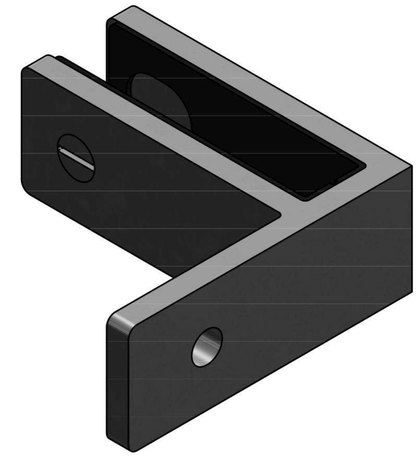

Glass Stiffener to suit 10mm - 12mm Glass

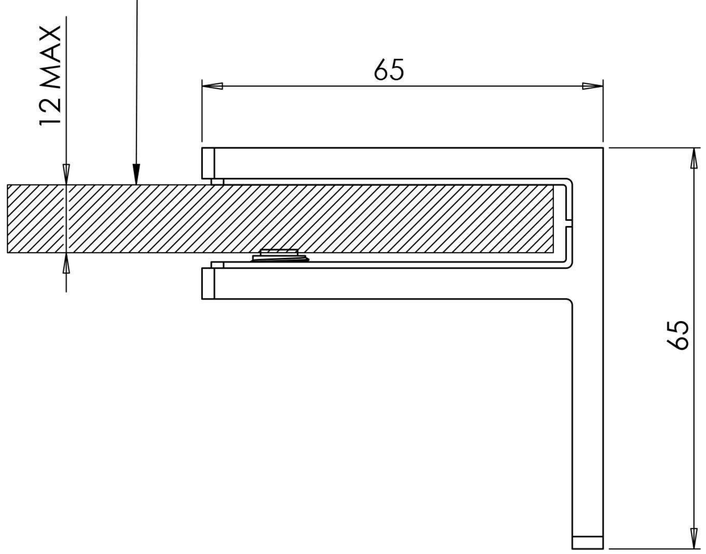

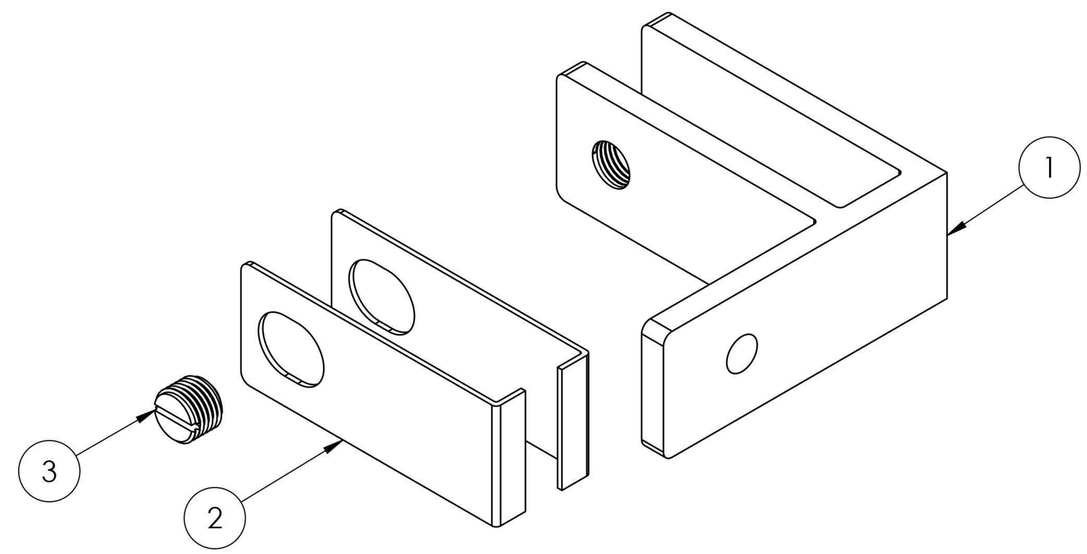

ITEM NO.	PART NUMBER	DESCRIPTION	QTY.
1	182242012	Wall Bracket to suit 10mm - 12mm glass	1
2	182242012 Part1	Black Plastic Gasket	2
3	182242012 Part2	Flat Head Screw	1
4	182242012 Part3	Rubber	1